2
2021
第 35 卷第 2 期　总第 138 期
（季刊，1987 年创刊）

电子电气评论

编辑委
委　：
委　：
委　：马
1
编：
编：
编辑：
编辑：
编辑　：《　　》辑
：　　18
：611731
：028-87898262/63
：028-87898267
：dfdqpl@dongfang.com
：
：
782

□ □ □ □ □ □ □ □ □ □ □ □ □ ····· □ □ □　□ □　□ □ □(1)
□ □ □ □ 5G □ □ □ □ □ □ □ □ □ □ □ □ □ □ □ □
····· □ □ □　□ □ □　□ □ □ □(6)
□ □ □ □ □ □ □ □ IGBT □ □ □ □ □ □ □ □
····· □ □　□ □ □　□ □ □ □(11)
□ □ □ □ □ □ □ □ □ □ □ □ □ CFD □ □ ····· □ □　□ □　□ □(15)
□ □
····· □ □　□ □　□ □ □(21)
□ □
····· □ □　□ □ □　□ □ □ □(25)
□ □
····· □ □ □　□ □　□ □(30)
□ □
····· □ □ □　□ □ □(35)
□ □ □ □ □ □ □ □ □ □ □ □ ····· □ □ □　□ □　□ □ □(38)
F □
····· □ □ □　□ □　□ □(41)
□ □ □ □ □ □ □ □ ····· □ □　□ □　□ □ □ □(45)
□ □ □ □ □ □ □ □ □ □ □ □ □ □ □ □ □ □ □ □
····· □ □ □　□ □ □　□ □ □ □(50)
120 m □ □ □ □ □ □ □ □ □ □ □ □ □ □ □ □ □ □
····· □ □ □　□ □　□ □(54)
□ □ □ □ □ □ □ □ □ □ □ □ □ □ □ ····· □ □　□ □ □　□ □ □(58)
□ □ □ □ □ □ □ □ □ □ □ □ ····· □ □ □　□ □ □　□ □ □ □(63)
□ □ □+□ □ □ □ □ □ □ □ □ □ □ □ ····· □ □ □(66)
□ □ □ □ □ □ □ □ □ □ □ □ □ □ □ □ ····· □ □ □　□ □ □(70)
□ □
····· □ □ □　□ □　□ □ □ □(73)
□ □
····· □ □ □　□ □ □　□ □ □(81)
□ □ □ □ □ □ □ 6N □ □ □ □ □ ····· □ □(86)
□ □ ····· (20)(29)(34)(49)(53)(69)(80)(85)

[　　]CN51-1333/TM*1987*q*A4*88*zh*p*¥8.00*750*20*2021-02

2

□□□□

□□□□□□□□□□ □□□□ □□ □□□□ □
(□□□□□□□□□□, □□□□□ □□□□□)

□□□□□□□□

BASIC RESEARCH

The Research of the Preparation Characteristics of Coal Water Slurry with Organic Waste Liquid ····· , G , ,e ( )
Design and Debugging of Edge Computing Algorithm for Industrial Terminal Applied to Smart Wind Power ····· , , ,e ( )
Suppression of Turn Off O er oltage of I BT in Bac to Bac Power odule ····· G , , ,e
C D Analysis for Effects of ulti no le Distribution on low easurement ····· , Q ,
Heat Balance odeling and E periment on the Cold Start of Proton E change embrane uel Cell PE C Engine ····· e , , G e e ( )

THER AL POWER COAL IRED POWER

De elopment and Application of Automatic Control System for Hydrostatictest of Boiler Header Products ····· G , , G ,e ( )
Impro ement of Surface uality of Boiler Short Tube Elbows and Optimi ation Design of Side Boosting Tube Bending Equipment ····· G , G , G ( )
Discussion on C achining Technology of Large Comple Surface Based on Re erse Engineering Technology ····· , ( )
Current Situation and Analysis of atural as Power eneration in China ····· G e , , ( )

T RBI E

Application of Class Combined Cycle Drainage condensation bac type Heating nit ·····

EDITORIAL BOARD

Chairman: WANG Weimin

Vice Chairmen: WANG Zheng, YANG Yong

Members: MA Qingtian, WANG Xiaoliang, WANG Yu, WANG Jianlu, WANG Zheng yuan, FANG Yu, DENG Zhongyong, LE Jinsong, SHI Qinghua, GUANG Haijie, LIU Shihong, LIU Taisheng, ZHANG Qide, ZHANG Guorong, ZOU Jie, HE Wei, CHEN Wenxue, CHEN Jiefu, YANG Wuyong, YANG Yaowu, YANG Huachun, MIN Zesheng, WU Jiandong, ZHAO Yongzhi, ZHAO Shiquan, HOU Xiaoquan, HE Jianhua, ZHONG Jie, GUO Yan, TANG HongJu, XIE Guangyou, ZENG Mingfu, LAI Chengyi, PAN Qiangang, HUO Suoshan

Chief Secretary: YANG Yong

Sponsor: Dongfang Electric Corporation
Chief Editor: WANG Weimin
Vice Chief Editors: WANG Zheng, YANG Yong
Executive Editor: WANG Weimin
English Editor: WANG Weimin
Edited and published by:
Editorial Department of Dongfang Electric Review
No. 18 Xi Xin Avenue, Gao Xin Xi District, Chengdu, Sichuan, P. R. China

Postal Code: 611731

Tel: 028-87898262 87898263 **Fax:** 028-87898267

E-mail: dfdqpl@dongfang.com

Overseas Distribution by:
China National Publishing Industry Trading Corporation
(P. O. Box 782, Beijing, P. R. C.)

	$V \quad \sqrt[K]{\frac{P \quad \times \qquad \times V^{K}}{P \quad \times}}$
P	$V \quad V \quad V$
	$h \quad \frac{\times \ V \quad V}{\pi \ \times d} \quad h$
	$V \quad V \quad V$
	$V \quad \sqrt{\frac{P \quad \times \qquad \times V^{K}}{P \quad \times}}$
P	
	$h \quad \frac{\times \ V \quad V}{\pi \ \times d} \quad h$

$V \quad \times$

P

P

5

“ ”

“ ”

“ ” “ ”

“ ” “ ” “ ”

618000

Overview of Bulb Turbine Generator Design in Sesan 2 Hydroelectric Power Plants

DU Fangmian, SH

i P

1

±

2

3

。

。

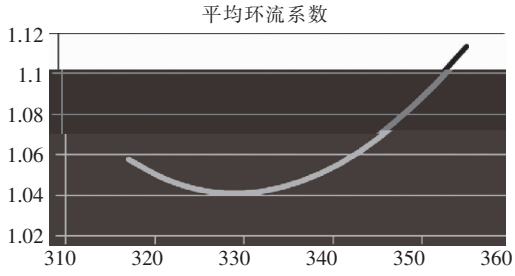
平均环流系数
1.12
1.1
1.08
1.06
1.04
1.02
310
320
330
340
350
360

。

	μ			μ	
X	*Y*	*X*	*Y*	*Z*	

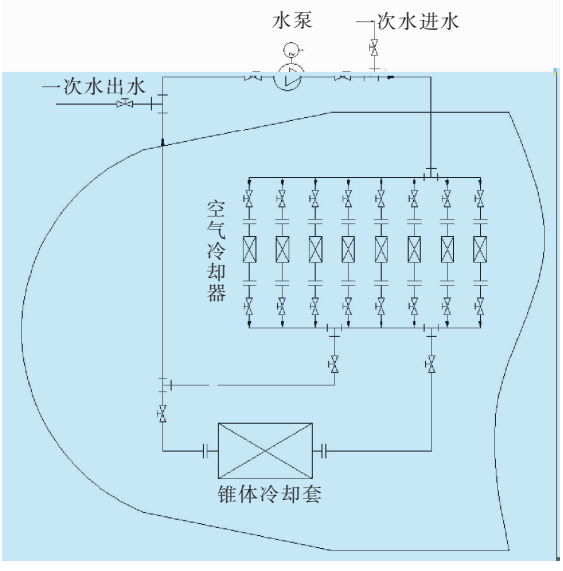

“ ”

4

“ ”

614200

Ⅱ Ⅵ

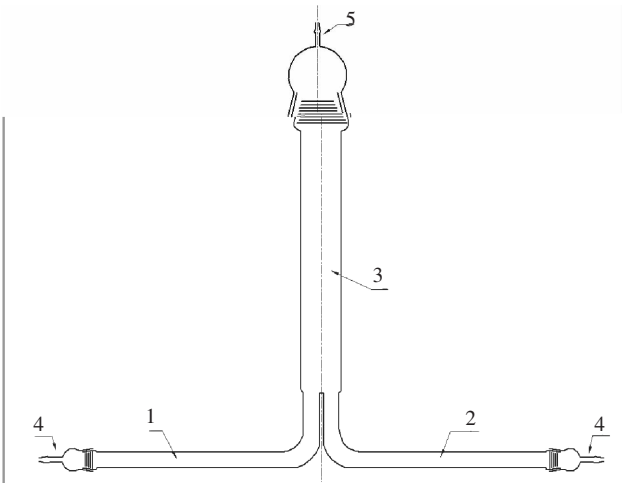

2

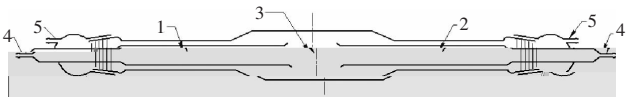

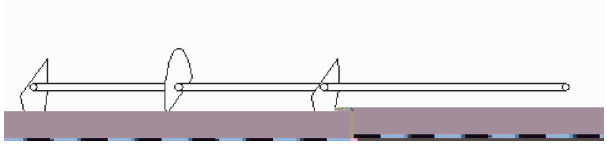

3

	±	±	±	±	±
	±	±	±	±	±

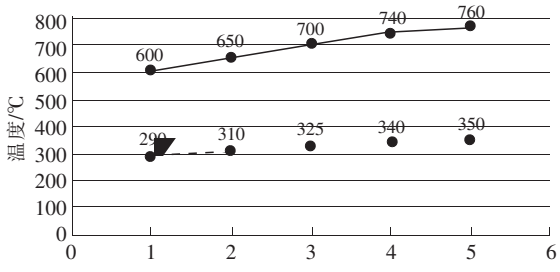
800
700
600
500
400
300
200
100
0
温度/℃
0
1
2
3
4
5
6
600
650
700
740
760
290
310
325
340
350